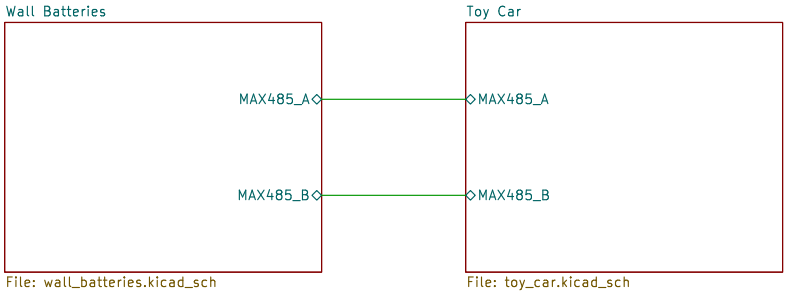

Thanksgiving Point Inc.
Author: Isai Sanchez

Sheet: /
File: Jumper Cable Wall Batteries.kicad_sch

Title: Jumper Cable Interactive Schematic

Size: A4	Date: 2026-03-03	**Rev: vMARCH 2026**
KiCad E.D.A. 9.0.4		Id: 1/3

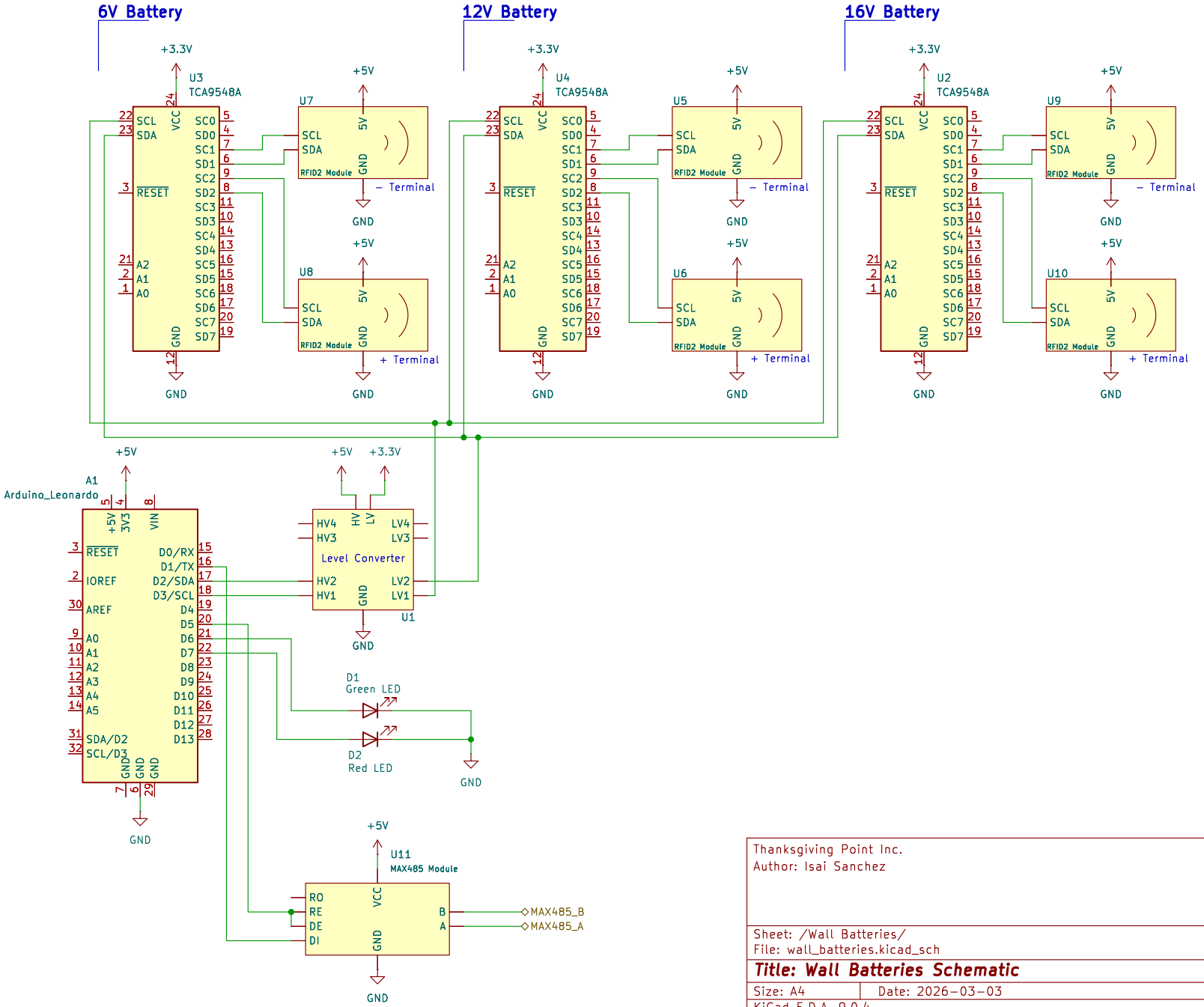

Thanksgiving Point Inc.
Author: Isai Sanchez

Sheet: /Wall Batteries/
File: wall_batteries.kicad_sch

Title: Wall Batteries Schematic

Size: A4	Date: 2026-03-03	Rev: vMARCH 2026
KiCad E.D.A. 9.0.4		Id: 2/3

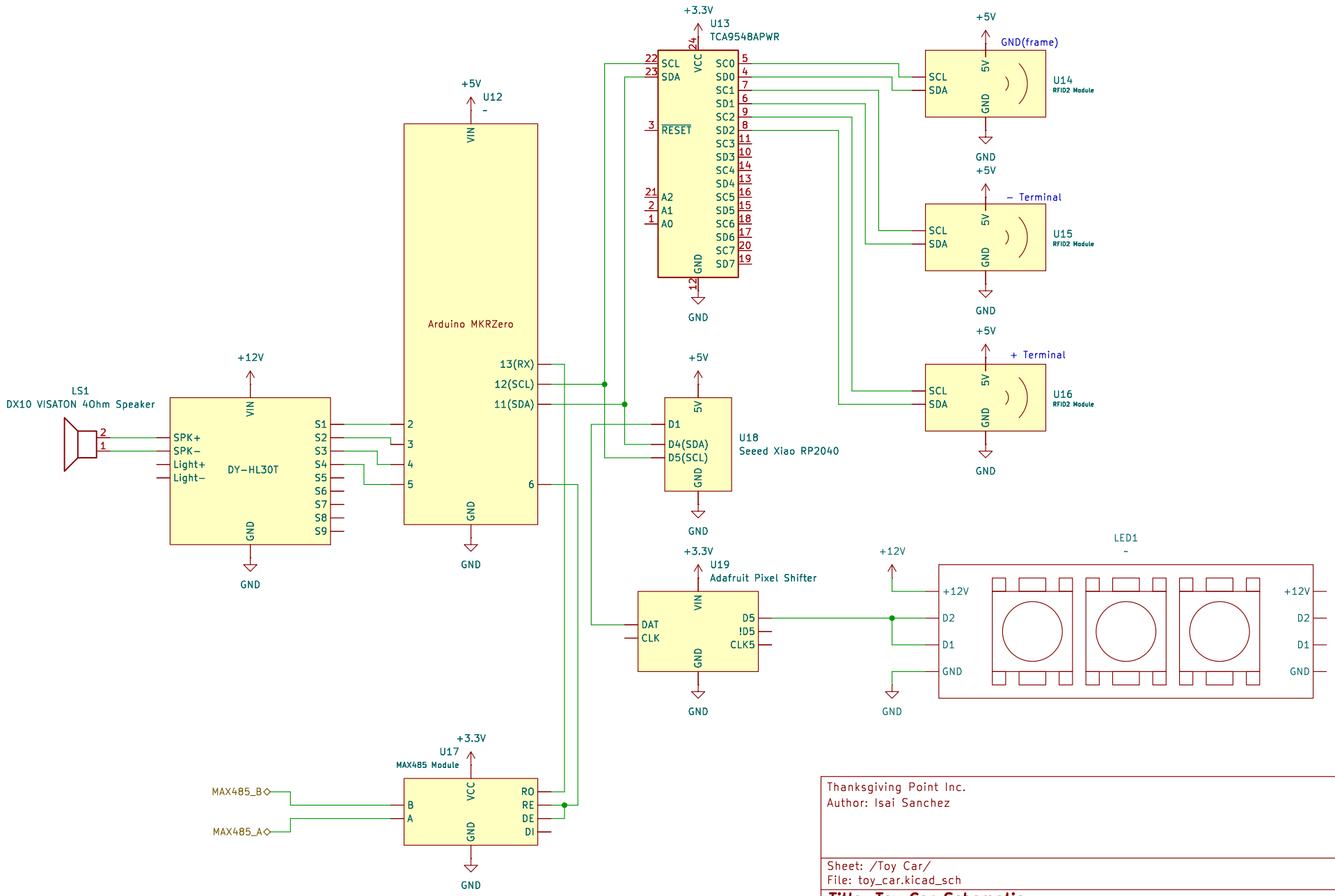

Thanksgiving Point Inc.
Author: Isai Sanchez

Sheet: /Toy Car/
File: toy_car.kicad_sch

Title: Toy Car Schematic

Size: A4	Date: 2026–03–03	**Rev: vMARCH 2026**
KiCad E.D.A. 9.0.4		Id: 3/3